TABLE A (FOR FEMALE)

HGM8-WP059	PBT UL94V-0; BLACK
HGM8-WP079	BRASS; NICKEL PLATED

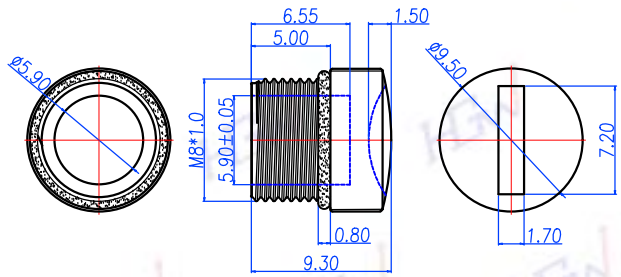

1.MATERIAL:
  1-1.HOUSING: SEE TABLE A
  1-2.O-RING: NBR; COLOR: BLACK
2.WATERPROOF: IP67

TABLE A

HGM8-WP400	BRASS

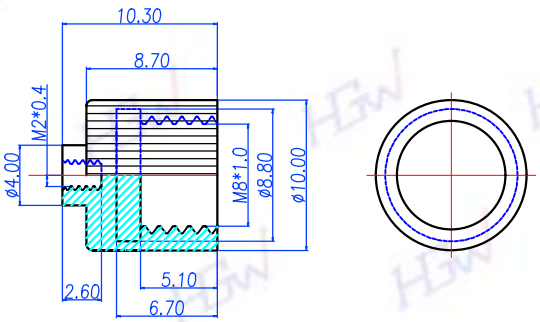

1.MATERIAL:
  1-1.SHELL: BRASS
  1-2.O-RING: EPDM; COLOR: BLACK
2.FINISH
  2-1.SHELL: NICKEL PLATED
3.WATERPROOF: IP67

(FOR MALE)

禾剛企業有限公司
HOU GUN ENTERPRISE CO., LTD.

REV	DESCRIPTION	DATE
A		100615

TITLE: M8公母用防水蓋

P/N:

DWG. NO: HGM8-WPCAP

DR. Dan | UNIT: mm

CH. Jason | SCALE 2:1

AP. Lanny

UNLESS OTHERWISE SPECIFIED TOLERANCES:
X ± 0.1 XXX ± 0.03
XX ± 0.05 ANGLE ± 1°

REV. A | SHEET 1/1